REVISIONS				
REV	DESCRIPTION OF REVISION	ECN No.	DATE	APPROVED
A	INITIAL RELEASE	———	06/18/2013	M. Dong
B	DIMENSIONS CHANGED	———	08/16/2015	M. Dong
C	KNURL CHANGED	———	03/12/2017	M. Dong

TECHNICAL DATA

Electrical

Impedance	50 Ω
Frequency range	0~6 GHz
Withstanding voltage	1000 V
Insulation resistance	≥5000MΩ

Mechanical & Environmental

Durability (matings)	>500
Temperature range	-55 °C ~ +165 °C
RoHS Compliant	Yes

Material & Finish

Body	Brass, Gold-plated
Pin Contact	Phosphor Bronze, Gold-plated
Insulator	PTFE

Interface Standards

SMA	IEC-60169

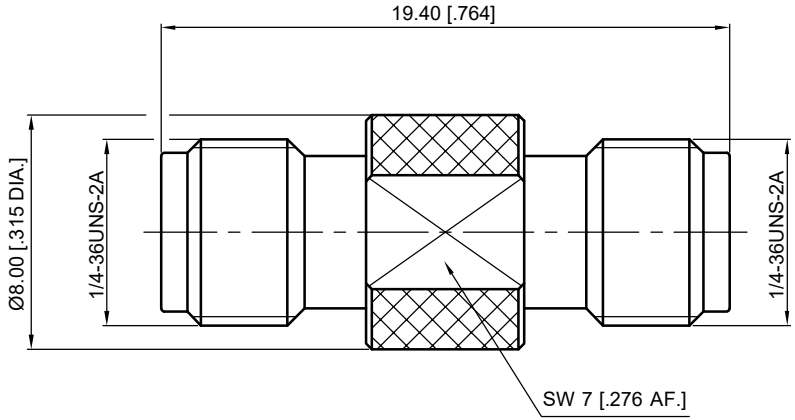

NOTES:

1. ALL SPECIFICATIONS ARE SUBJECT TO CHANGE WITHOUT NOTICE AT ANY TIME
2. UNLESS OTHERWISE SPECIFIED ALL DIMENSIONS ARE NOMINAL.

UNLESS OTHERWISE SPECIFIED, DIMENSIONS ARE IN MILIMETERS [INCHES] .
UNLESS OTHERWISE SPECIFIED DIMENSIONAL TOLERANCES ARE:
.XX ±0.13 [.005"]
.X ±0.20 [.008"]
X ±0.50 [.019"]
ANGULAR TOLERANCES ARE: ALL= ±1°

DO NOT SCALE DRAWING

PROJECTION:

DRAWN:	L. Ma	03/12/2017
CHECKED:	J. Zhu	03/12/2017
APPROVED:	M. Dong	03/12/2017

TITLE:

Adapter, SMA Female to SMA Female

CMPTER®

Cmpter Electronics Co., Ltd. www.cmpter.com

PART No.:

A-SMAF-SMAF-221

SIZE:	SCALE:	SHEET:	REV:
A4	4:1	1/1	C