REVISIONS				
REV	DESCRIPTION OF REVISION	ECN No.	DATE	APPROVED
A	INITIAL RELEASE	———	07/19/2022	M. Dong
B	CABLE STRIPPING DIMENSIONS CHANGED	———	07/20/2022	M. Dong

TECHNICAL DATA

Electrical

Impedance	50 Ω
Frequency range	0~6 GHz
Withstanding voltage	500 V
Insulation resistance	≥5000MΩ

Mechanical & Environmental

Durability (matings)	>500
Temperature range	-55 °C ~ +165 °C
RoHS Compliant	Yes

Material & Finish

Body	Brass, Gold plated
Pin Contact	Phosphor Bronze, Gold plated
Fastening Nut	Brass, Gold plated
Washer	Phosphor Bronze, Gold plated
Insulator	PTFE

Interface Standards

SMA	IEC-60169

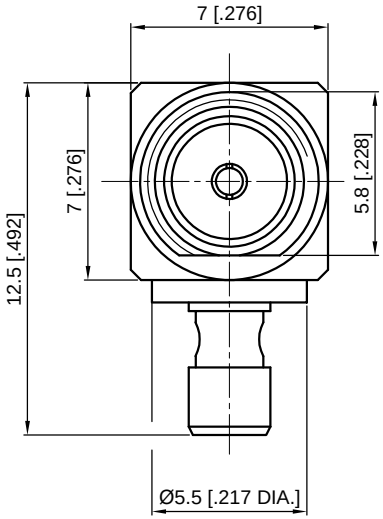

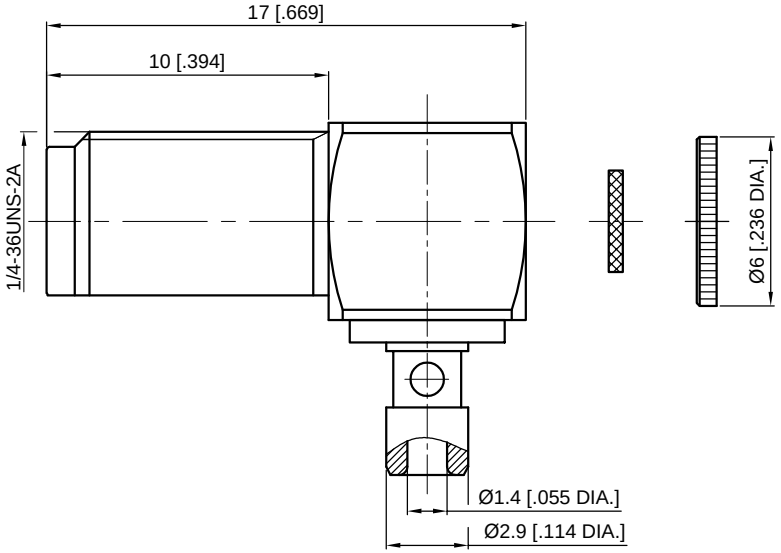

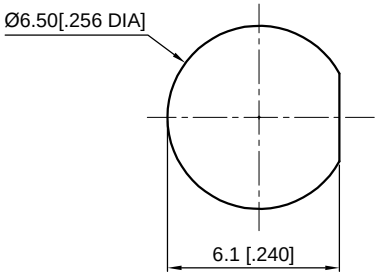

Recommended Mounting Hole

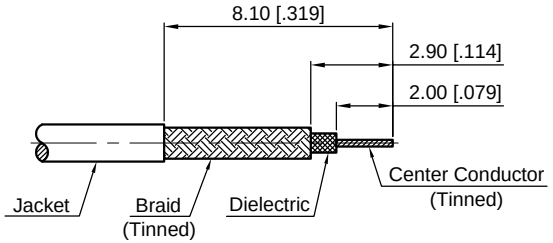

Recommended Cable Stripping Dimensions

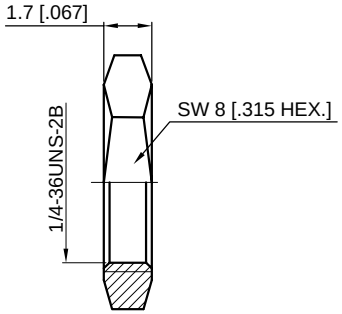

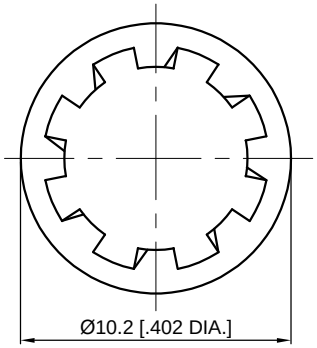

NOTES:

1. ALL SPECIFICATIONS ARE SUBJECT TO CHANGE WITHOUT NOTICE AT ANY TIME
2. UNLESS OTHERWISE SPECIFIED ALL DIMENSIONS ARE NOMINAL.

UNLESS OTHERWISE SPECIFIED, DIMENSIONS ARE IN MILIMETERS [INCHES] .
UNLESS OTHERWISE SPECIFIED DIMENSIONAL TOLERANCES ARE:

.XX	±0.13 [.005"]
.X	±0.20 [.008"]
X	±0.50 [.019"]

ANGULAR TOLERANCES ARE: ALL=±1°

DO NOT SCALE DRAWING

PROJECTION:

DRAWN:	L. Ma	07/20/2022
CHECKED:	J. Zhu	07/20/2022
APPROVED:	M. Dong	07/20/2022

TITLE:

SMA Right Angle Bulkhead Female Solder for Mini Coaxial 1.13mm/1.32mm/1.37mm Cable

CMPTER®

Cmpter Electronics Co., Ltd. www.cmpter.com

PART No.: **60-12-2B23-443**

SIZE:	SCALE:	SHEET:	REV:
A4	4:1	1/1	B